NOSE ASSEMBLY DATA SHEET

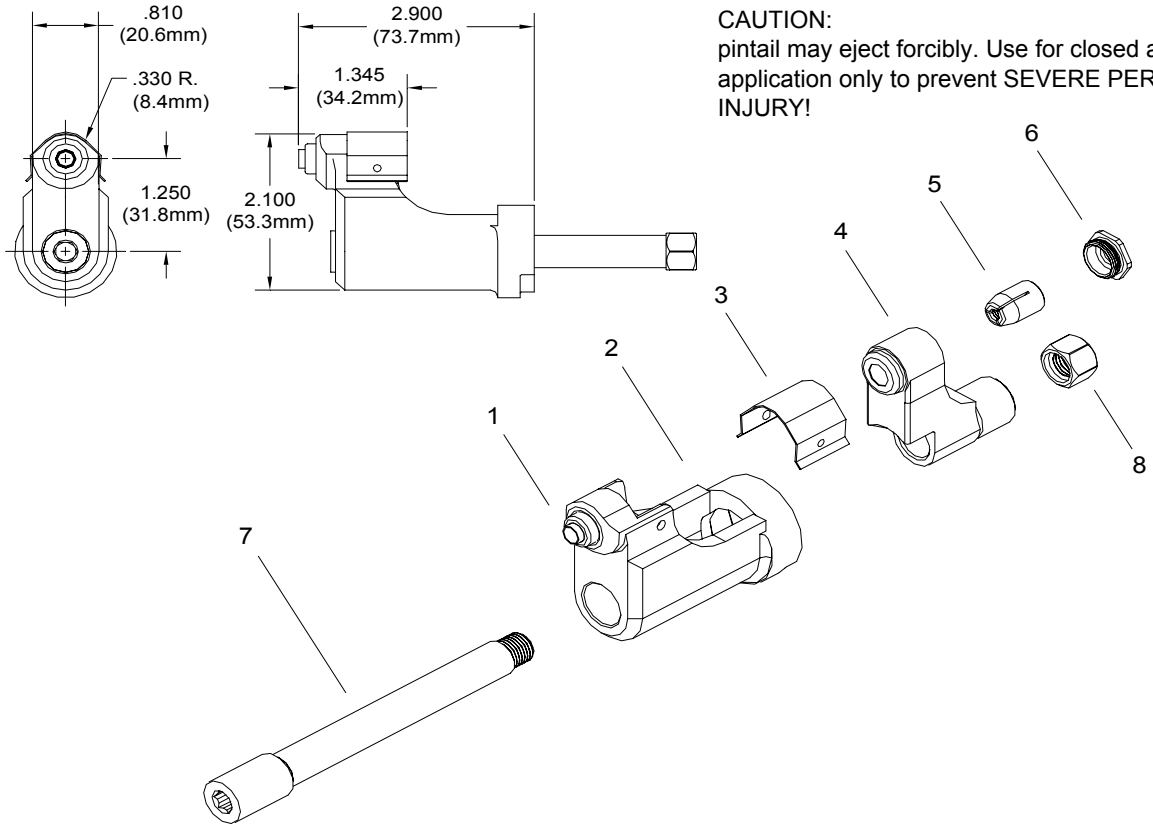

CAUTION:
pintail may eject forcibly. Use for closed access application only to prevent SEVERE PERSONAL INJURY!

ASSEMBLY INSTRUCTIONS:
On front of GBP204 Installation tool remove screw and stop. With Collet placed in Anvil, install on tool. Slide Draw Bar thru Anvil and Collet. Using an allen wrench, tighten the nut on the end of the Draw Bar (apply Vibra-Tite part no. 405124 to threads on Draw Bar). Replace screw and stop on tool.

8/05 Rev. 3/06

*Use adapter No. 751204. GBP752E recommended for -6 and -8 only
**Use Adapter No. 353204
***Use adapter No. 751204 with 713152 stroke limiter.

GAGE BILT
MADE IN U.S.A.

GAGE BILT PRODUCTS CORP.
14500 Barber Drive (586) 771-7664
Warren, Mi 48088 (586) 771-2665 Fax
e-mail:solutions@gagebilt.com / www.gagebilt.com

Type:	Fastener:	Recommended Tool: GBP204
Non Self-Releasing 13/64", 17/64" & 21/64" Ø	2 ASP, ASP PF, ASP FF ASP F & ASP LC	Alternate Tools: *GBP752E, **GBP745D & ***GBP713C

Ref. No.	Qty.	Description	*ASP06-204C-27OS	*ASP08-204C-27OS	ASP10-204C-27OS
1	1	Cap Assembly	10142	10143	10174
2	1	Anvil Assembly	19988	19989	19980
3	1	Guard	60426	60426	60426
4	1	Collet	20722	20722	20722
5	1	Super-Grip Jaw Assembly	30656-S4	30864-S6	30863-S2
6	1	Cap	70647	70647	70647
7	1	Draw Bar	71116	71116	71116
8	1	Nut	71114	71114	71114